| | PART NO. & CH. CODE | MATERIAL | COLOR |
|---|---|---|---|
| 1 | 7157-6367-70 | PBT | YELLOW |
| 3 | 7157-6367-30 | | BLACK |

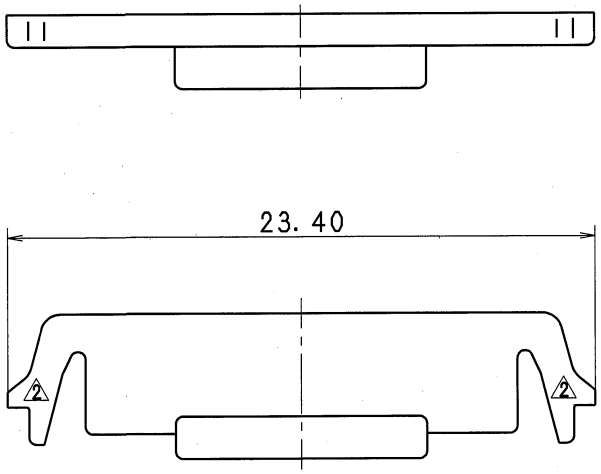


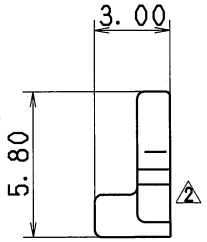


注記

4 1. 本部品はN16MW (7122-1367)、N16FW (7123-1367) に各2個装着される。

NOTE

4 1. THIS PART IS TO BE MOUNTED ON N16MW (7122-1367), OR N16FW (7123-1367).

ISSUE MARK

| LET | DATE | REVISION RECORD | NO. | CHKD |
|---|---|---|---|---|
| 4 | 12. 03. 06 | ADDED GENERAL TOLERANCE ETC. | C12-Z292 | J. B |
| 3 | 98. 08. 31 | ADDED COLOR PART NO. | C98-M542 | H. K |
| 2 | 96. 08. 07 | CHANGED FORM | C96-M497 | H. K |
| 1 | 90. 03. 19 | RENEW | C90-L111 | H. Y |

4 GENERAL TOLERANCE

| | 10MAX | 50MAX | 100MAX | 250MAX | 2500VR | ANGLE | ECCENT |
|---|---|---|---|---|---|---|---|
| A | ±0. 15 | ±0. 2 | ±0. 3 | ±0. 5 | ±0. 75 | ±30′ | 0. 1 |
| B | ±0. 2 | ±0. 3 | ±0. 55 | ±0. 95 | ±1. 4 | ±30′ | 0. 1 |
| C | ±0. 3 | ±0. 5 | ±0. 8 | ±1. 4 | ±2 | ±30′ | 0. 15 |

SPECIFIED

MASS

| | | | | | |
|---|---|---|---|---|---|
| CUSTOMER | | | | | |
| CUSTOMER PART NO. | | CUSTOMER DWG NO. | | | |
| OFFICE | | TRIAL PART NO. | | | |
| VENDOR | | | | | |
| VENDOR NO. | | | | | |
| DWG TYPE | DWG SOURCE | DWG DATE | UNIT | SCL | ANGLE |
| R | RENEW | 84. 05. 04 | mm | 5/1 | 3 |
| APPROVED | CHECKED | CHECKED | DESIGN | DRAWN | |
| M. KASHIYAMA | | | T. WATANABE | J. BINALLA | |
| 12. 03. 06 | | | 84. 01. 13 | 12. 03. 06 | |

MATL. SPEC. SEE TABLE

TREAT. & FIN.

NAME 4 N TYPE HOUSING 16P REAR HOLDER

PART NO. CH. CODE 3 7157-6367-70 ETC.

DWG NO. 7157-6367-70:R

SET DWG NO.

YAZAKI CORPORATION